26U - ANSI/AWWA C153/A21.53
Union-Tite Compact
Ductile Iron Fittings
Revised 6/2016

☐ **DOMESTIC** ☐ **NON-DOMESTIC**

SUBMITTAL: C153 UNION-TITE PRODUCT

(Current revisions for the noted Standards apply)

SIZES: 4" through 24"

STANDARDS: ANSI/AWWA C153/A21.53, NFPA13/24, 4"-12" UL listed & approved (File - Tyler Union)

MATERIAL: Cast of ASTM A536 qualified ductile iron. Date code is cast on and required for traceability.

PRESSURE RATING: *Flanged fittings rated at 250 psi. Mechanical joints 2" – 24" rated at 350 psi and 30" – 48" at 250 psi.
*Note: With rubber annular ring flange gasket, 2" – 24" Flanged fittings can be rated at 350 psi.
Note: Wyes over 12" are not pressure rated. Contact Tyler Union for rating in your application.

DEFLECTION: Max joint deflection 2"– 12", 5° and 14"– 48", 3°. Reduces by 50% at nominal pipe & fitting diameters

NSF-61 & NSF372: Meets all requirements including Annex G, Tyler Union's Underwriters Laboratory listing MH16439.

ASPHALT COATING: Per ANSI/AWWA C104/A21.4 and ANSI/AWWA C153/A21.53.

CEMENT LINING: Per ANSI/AWWA C104/A21.4, with double cement lining.

EPOXY COATING: Fusion bonded epoxy per ANSI/AWWA C116/A21.16. Additional coatings available upon request.

BARE FITTINGS: Available upon request.

FASTENERS: High strength low alloy weathering steel per ANSI/AWWA C111/A21.11 and ASTM A242

RESTRAINING LUGS: *Lugs provided on 16" and smaller fittings. Lug pattern accommodates most grip type restraints.
***NOTE:** With sufficient lead time to adapt tooling, restraining lugs are available on 18"-24" fittings.

INSTALLATION: Install per AWWA C600/C651 using pipe conforming to ANSI/AWWA C151/A21.51 or AWWA C900/905. Designed for use with TYTON® and McWane Sure Stop® gaskets. Contact Tyler Union Regarding the installation or use of other gasket types and/or gasket manufacturers.

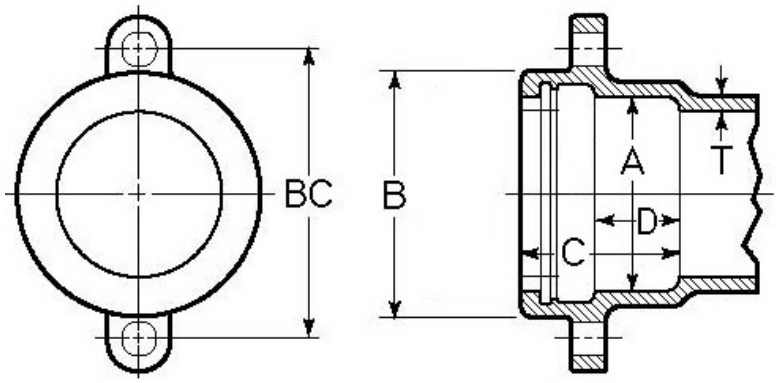

NOMINAL JOINT DIMENSIONS IN INCHES

Size Inches	Pipe Diameter	A Dia.	B Dia.	B.C. Dia.	C Dim.	D Dim.	E Dim.	Bolt Dia.
4	4.80	5.04	6.38	7.88	4.16	2.25	0.35	7/8
6	6.90	7.14	8.52	10.50	4.29	2.25	0.37	7/8
8	9.05	9.32	10.90	12.88	4.78	2.25	0.39	7/8
10	11.10	11.37	12.91	14.69	4.98	2.25	0.41	7/8
12	13.20	13.47	15.12	17.19	4.98	2.25	0.43	7/8
14	15.30	15.64	18.12	19.00	5.40	2.25	0.51	7/8
16	17.40	17.74	20.32	21.40	5.40	2.25	0.52	7/8
18	19.50	19.83	22.52	....	5.40	2.25	0.59	7/8
20	21.60	21.94	24.29	....	5.40	2.25	0.60	7/8
24	25.80	26.14	29.14	....	5.65	2.50	0.62	7/8

Anniston: 1501 W 17th St. ● Anniston, AL 36201 ● (800) 226-7601
Corona: 1001 El Camino Ave. ● Corona, CA 92879 ● (866) 527-8471
Tyler: 11910 CR 492 ● Tyler, Texas 75706 ● (800) 527-8478
Dallas: 1201 Ave. S. Suite100 ● Grande Prairie, TX 75050
Elmer: 701 Kenyon Ave. Elmer, New Jersey 03318
New Lenox: 2200 West Haven● New Lenox, IL 60451
Portland: 15670 N. Lombard St. ● Portland, OR 97203
Oxford: 1800 Greenbrier Dear Road ●Anniston, AL 36207